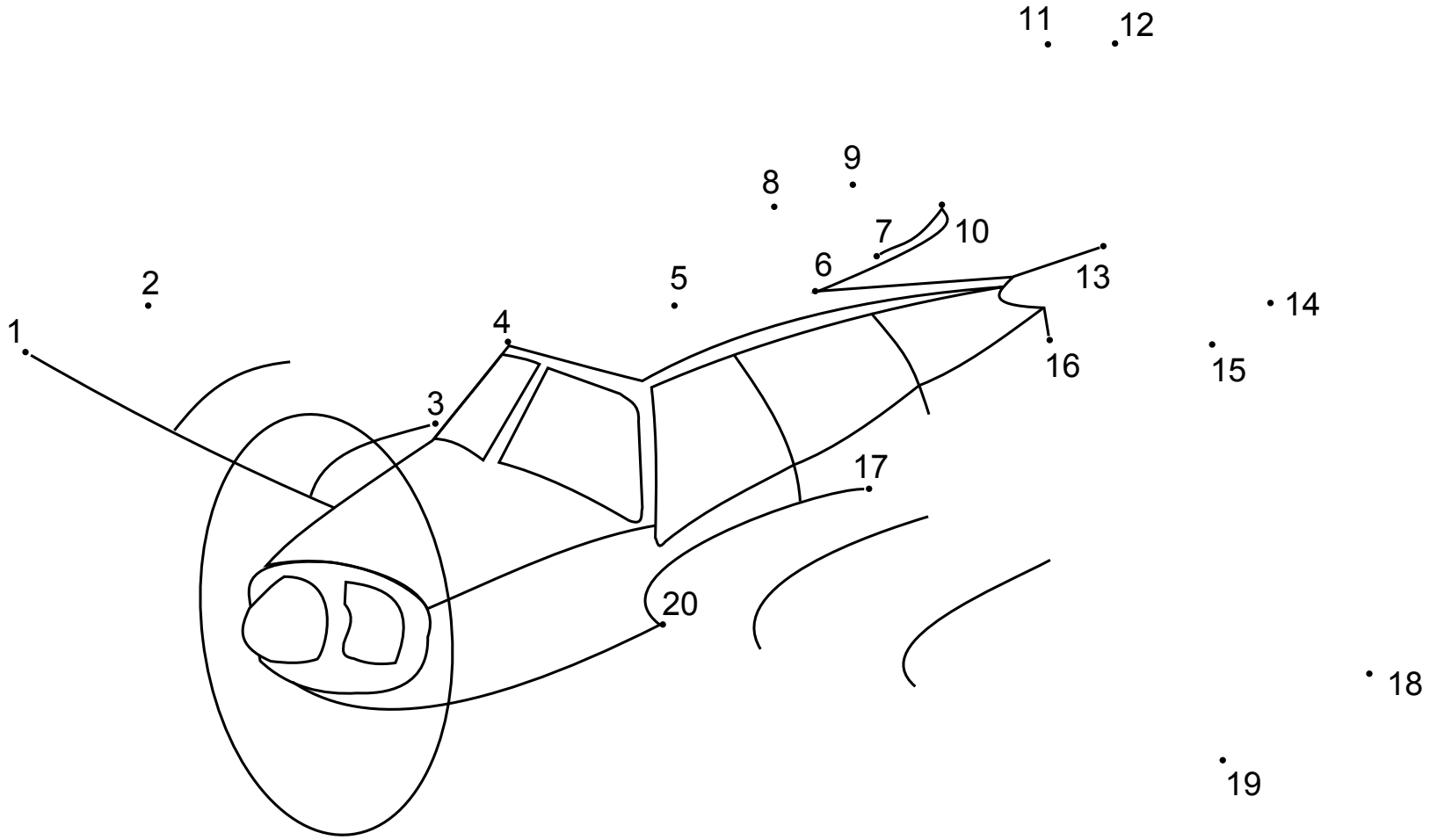

© www.kinder-malvorlagen.com